Cambridge Assessment International Education

Cambridge IGCSE™

CANDIDATE NAME	

CENTRE NUMBER						CANDIDATE NUMBER				

4367999486

DESIGN & TECHNOLOGY **0445/43**

Paper 4 Systems & Control **May/June 2021**

1 hour

You must answer on the question paper.

No additional materials are needed.

INSTRUCTIONS

- Section A: answer **all** questions.
- Section B: answer **one** question.
- Use a black or dark blue pen. You may use an HB pencil for any diagrams or graphs.
- Write your name, centre number and candidate number in the boxes at the top of the page.
- Answer in the space provided.
- Do **not** use an erasable pen or correction fluid.
- Do **not** write on any bar codes.
- You may use a calculator.

INFORMATION

- The total mark for this paper is 50.
- The number of marks for each question or part question is shown in brackets [ ].
- All dimensions are in millimetres.

This document has **20** pages. Any blank pages are indicated.

DC (PQ/CGW) 205873/2
© UCLES 2021

Section A

Answer **all** questions in this section.

1 A list of materials that can be used in a structure is given below.

Softwood **Concrete** **Steel**

For each material give **one** different property that makes it suitable for use in a structure.

Softwood .....

Concrete .....

Steel .....
[3]

2 Use sketches and notes to show how triangulation can be used to prevent a rectangular window frame from distorting while it is being fitted.

[2]

3 Fig. 3.1 shows salad tongs, which are an example of a third order lever.

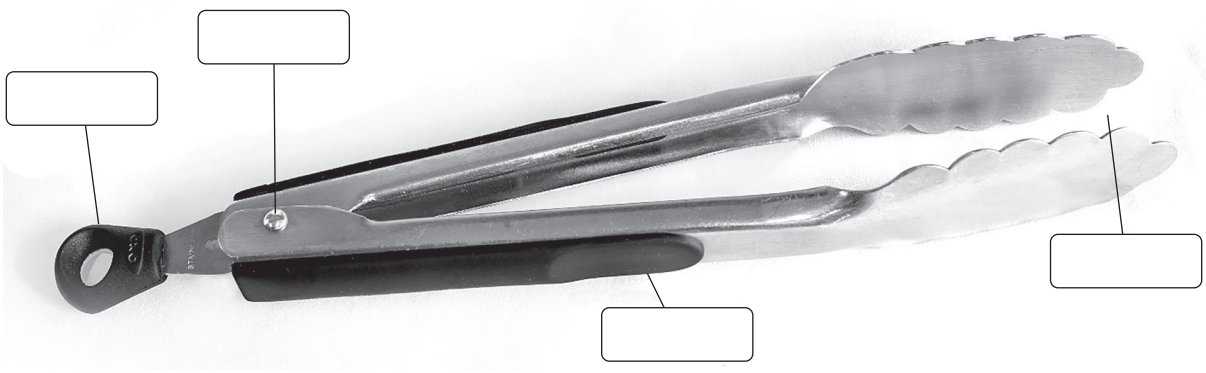

Fig. 3.1

(a) Add the positions of the **fulcrum**, **effort** and **load** to Fig. 3.1. [3]

(b) Explain how a third order lever is different to first and second order levers.

.....

.....

..... [2]

4 Spur gears can be made from brass, nylon or steel.

(a) Give **one** different reason for choosing each of these materials.

Brass .....

Nylon .....

Steel .....
[3]

(b) Name the applied load that could cause teeth on a spur gear to break off.

..... [1]

5 Fig. 5.1 shows a hand held moisture meter for testing moisture content in wood.

hand held moisture meter

meter in use on softwood

Fig. 5.1

Give **two** ergonomic features that have been considered in the design of the hand held moisture meter.

1 .....

2 .....
[2]

6 Describe the purpose of a specification when designing and making.

.....

.....

..... [2]

7 Give **two** benefits of using a CNC machine for manufacturing a batch of products.

1 .....

.....

2 .....

.....
[2]

8 Fig. 8.1 shows a simple electronic circuit.

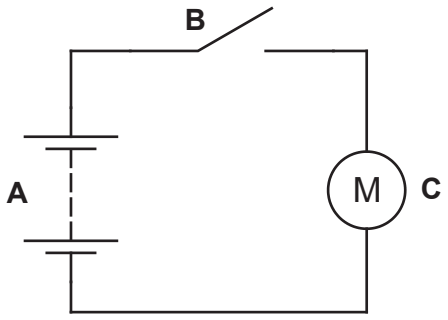

Fig. 8.1

Give the names of the components, **A**, **B** and **C** used in the circuit.

A .....

B .....

C .....
[3]

9 Fig 9.1 shows a toggle switch.

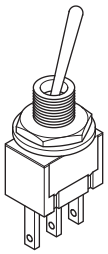

Fig. 9.1

Describe the action of the switch.

.....

.....

..... [2]

Section B

Answer **one** question from this section.

10 **(a)** Fig. 10.1 shows a 27 m high structure used to support an illuminated star.

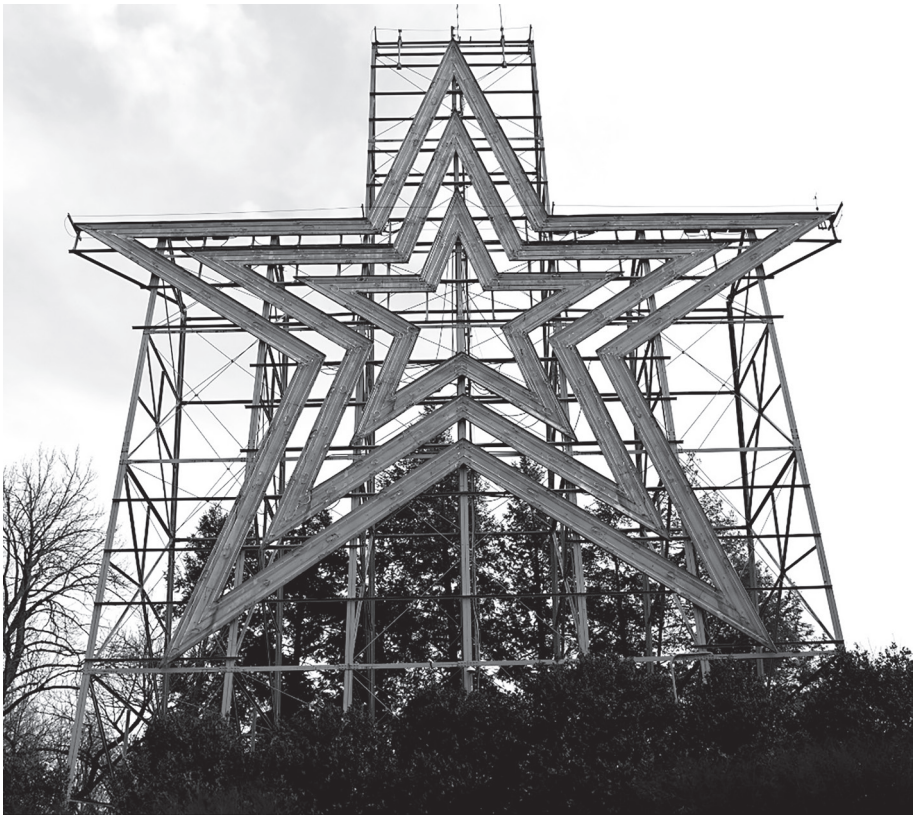

Fig. 10.1

(i) Name **two** stationary and **two** moving loads that will affect the stability of the structure.

Stationary Loads

1 .....

2 .....

Moving Loads

1 .....

2 .....

[4]

(ii) Ties and struts are used to keep the illuminated star structure rigid.
State **one** force resisted by a tie and **one** force resisted by a strut.

Tie .....

Strut .....

[2]

(iii) Give **one** advantage and **one** disadvantage of using struts, rather than ties in the structure.

Advantage .....

Disadvantage .....
[2]

(b) Fig. 10.2 shows part of a structure that has been joined using three bolts and nuts.

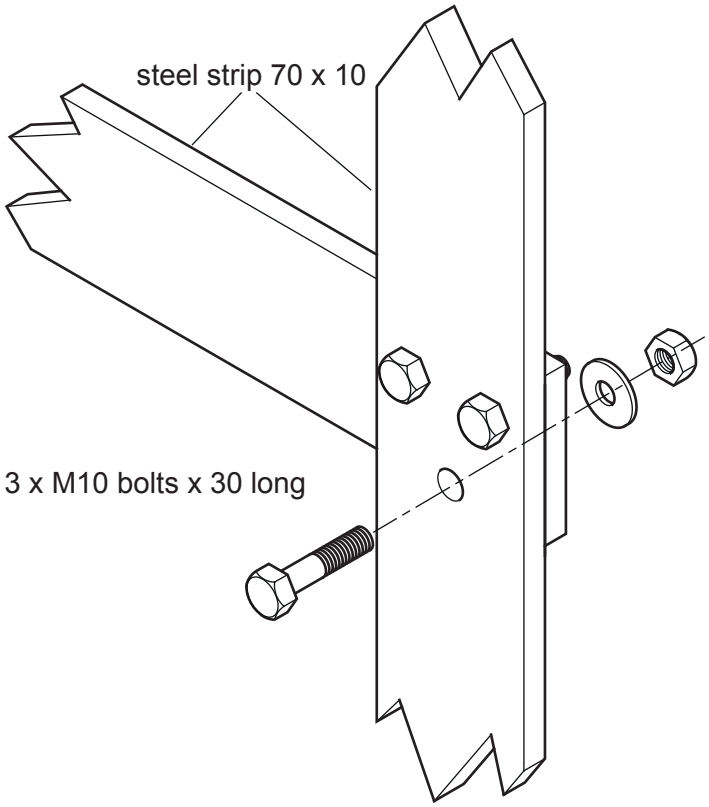

Fig. 10.2

(i) Explain why more than one bolt is required in the joint.

.....

.....

.....

..... [2]

(ii) When the nut is fully tight, the 30 mm length of bolt passing through the plate has stretched to 30.1 mm.
Calculate the strain in the bolt.

Use the formula: $\text{Strain} = \dfrac{\text{change in length}}{\text{original length}}$

.....

.....

.....

..... [2]

(iii) Explain how torsion and shear could affect the bolt and its threads if the nut is over-tightened.

.....

.....

.....

.....

..... [4]

(iv) Give **two** possible reasons for joining the materials with bolts and nuts rather than welding the materials together.

1 .....

2 .....
[2]

(c) Fig. 10.3 shows two methods of extending the length of a wooden beam.

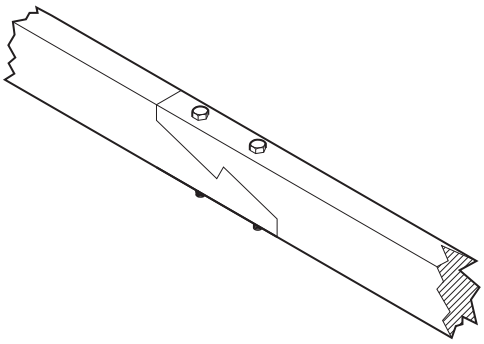

Method **A** − cut joint with reinforcing bolts

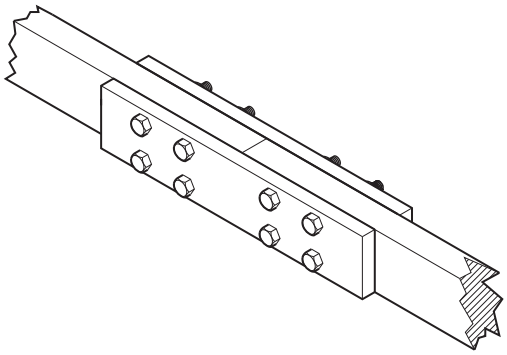

Method **B** − beam ends cut square with bolted plates either side

Fig. 10.3

(i) Give **one** reason why extending a wooden beam may be necessary.

..... [1]

(ii) Describe **one** advantage of method **B** when compared to method **A**.

.....

.....

..... [2]

(iii) Laminating is another way of making a long beam.
Use sketches and notes to show a laminated beam.

[2]

(d) Fig. 10.4 shows a playground see-saw mounted on a hard rubber spring.

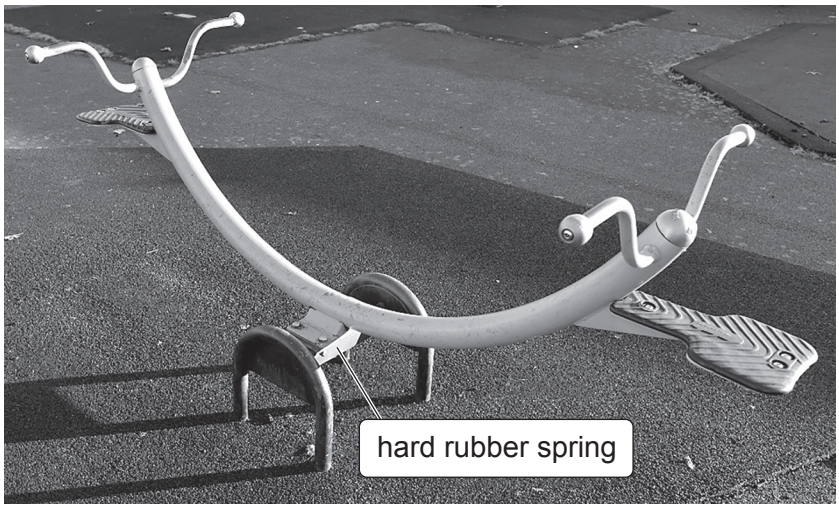

Fig. 10.4

Explain why the see-saw may not be in a state of equilibrium when it is in use.

.....

.....

..... [2]

11 **(a)** **(i)** Use sketches and notes to show the meaning of the term ‘dwell’ in a cam.

[2]

(ii) Fig. 11.1 shows the profile of a cam and a follower.

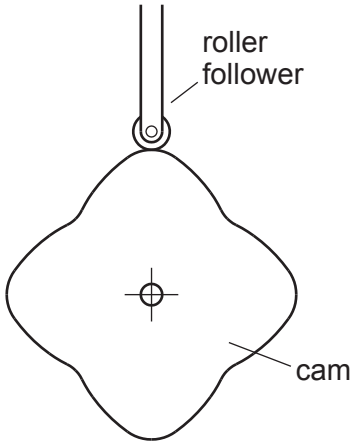

Fig. 11.1

Describe the movement of the follower for one rotation of the cam.

.....

.....

..... [2]

(iii) Give **one** benefit of using a roller follower for this cam.

.....

..... [1]

(b) Fig. 11.2 shows a ratchet and pawl mechanism used to tension a fence wire.

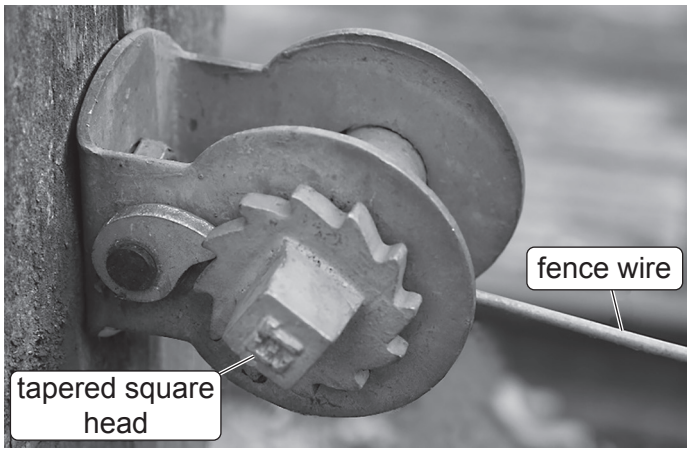

Fig. 11.2

(i) Explain how a ratchet and pawl mechanism operates.

.....

.....

.....

..... [3]

(ii) Use sketches and notes to show a design for a tool suitable for turning the tapered square head on the mechanism.

[3]

(iii) Give **one** possible reason for the taper on the square head.

.....

..... [1]

(iv) Describe how the tension in the fence wire can be released.

.....

.....

..... [2]

(c) Fig 11.3 shows a compound pulley system that transfers drive from an electric motor to a small lathe. The system uses two belts.

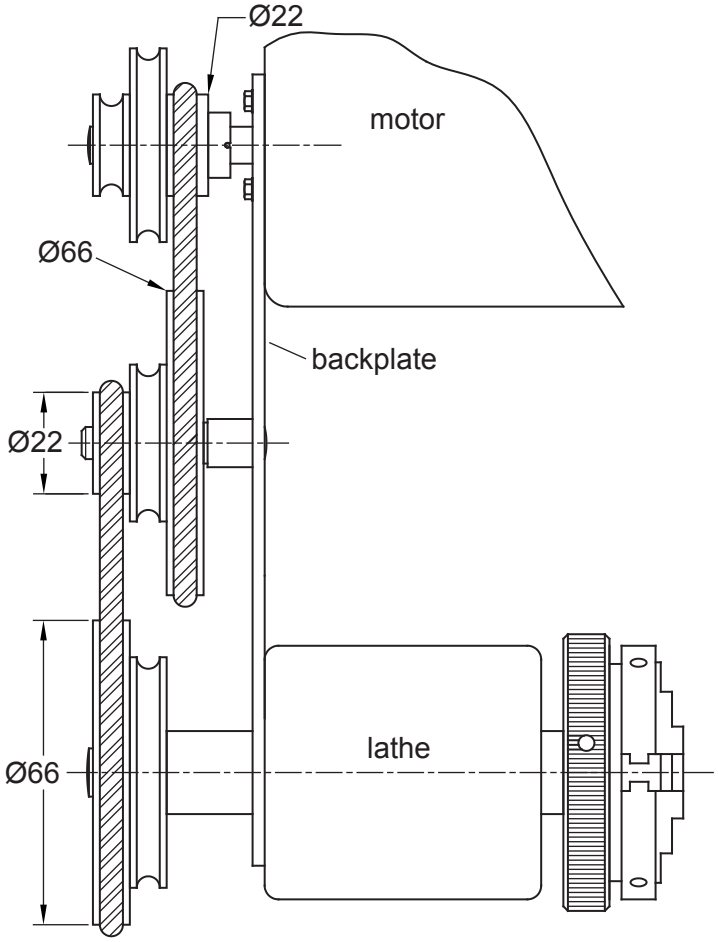

Fig. 11.3

(i) Calculate the output speed to the lathe with the belts in the position shown.
The motor is turning at 1215 rpm.

.....

.....

.....

..... [3]

(ii) Fig. 11.4 shows how the motor is mounted onto the backplate.

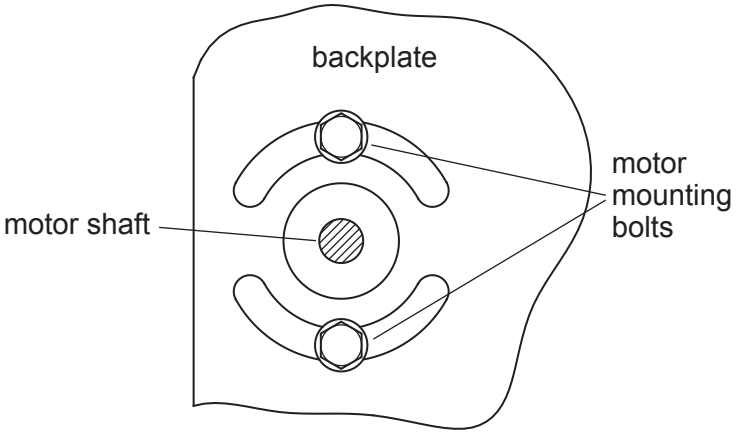

Fig. 11.4

Give **one** reason why slots are used instead of round holes to mount the motor.

.....

.....

..... [1]

(d) Fig 11.5 shows a drill chuck and chuck key.

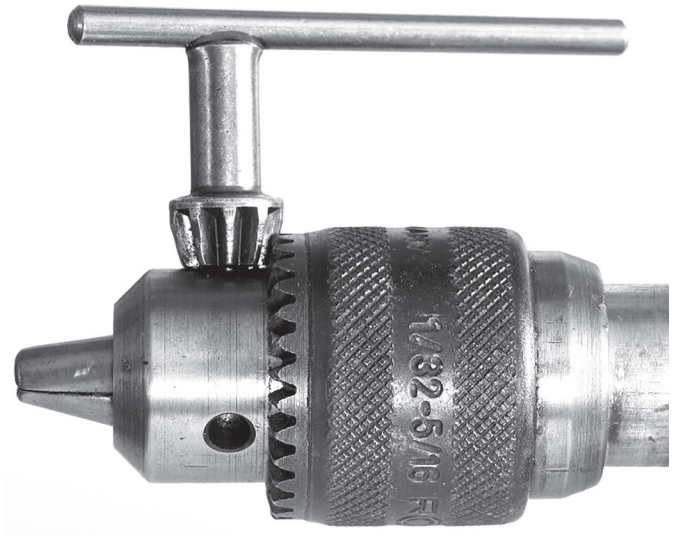

Fig. 11.5

(i) State the type of gear that is used between the drill chuck and chuck key.

..... [1]

(ii) Describe the **two** features in Fig. 11.5 that together provide the mechanical advantage of the chuck key.

1 .....

.....

2 .....

.....
[4]

(iii) The axes of the chuck and chuck key are at 90° to each other.
A worm gear is another type of gear that will connect axes at 90° to each other.
Give **two** reasons for using a worm gear in a mechanism.

1 .....

.....

2 .....

.....
[2]

12 **(a)** Fig. 12.1 shows a resistor colour code chart and a fixed resistor.

Colour	Band 1	Band 2	Multiplier	Tolerance
Black	0	0	× 1	
Brown	1	1	× 10	± 1%
Red	2	2	× 100	± 2%
Orange	3	3	× 1K	
Yellow	4	4	× 10K	
Green	5	5	× 100K	± 0.5%
Blue	6	6	× 1M	
Violet	7	7	× 10M	
Grey	8	8		
White	9	9		
Gold			× .1	± 5%
Silver			× .01	±10%

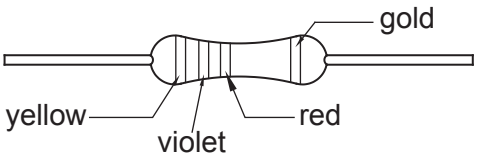

Fig. 12.1

(i) Describe the information given by the coloured bands on the resistor, including the tolerance band.

.....

.....

..... [2]

(ii) State the value of the resistor.

..... [1]

(iii) Give the range of resistance values that could be expected in a large batch of these resistors.

Lowest value .....

Highest value .....
[2]

(iv) Calculate the power rating of a 100 Ω resistor used in a 9 V circuit.

Use the formulae: $I = V/R$ and $P = V \times I$

Circle the most suitable resistor from the list below.

0.25 W **0.33 W** **1 W** **5 W** **0.125 W** **0.5 W**

[3]

(b) Fig. 12.2 shows one method of forming an electrical connection in a circuit.

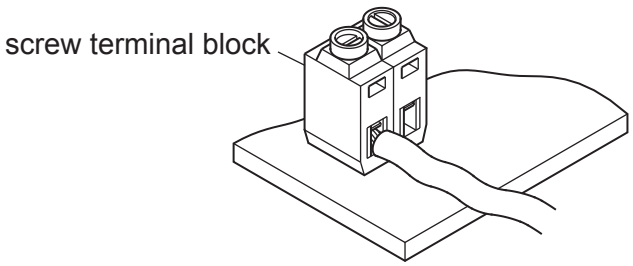

Fig. 12.2

(i) Use sketches and notes to show **two** different methods of making electrical connections. Show **one** temporary method and **one** permanent method.

Temporary method

Permanent method

[2]

(ii) Fig. 12.3 shows a multimeter that will be used to test the connection between the terminal block screw and connected wire in Fig. 12.2.

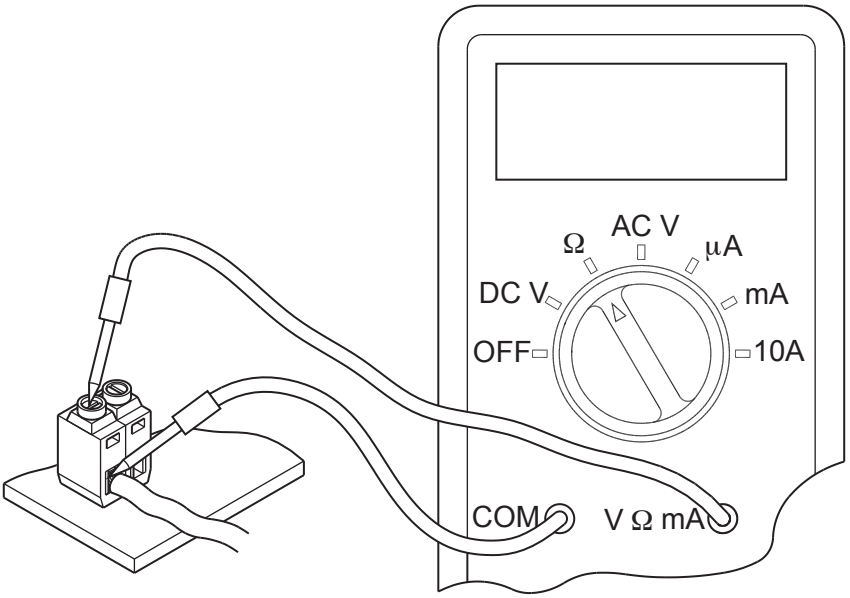

Fig. 12.3

State what is being measured by the multimeter on the Ω setting.

..... [1]

(iii) State the meaning of the following readings on the multimeter screen.

0.00 .....

1 .....

[2]

(c) Many electronic signals are very brief and do not give enough time for an indicator LED to light when testing for the signal.
To make the signal visible a 555 monostable circuit can be used to extend the length of the signal.

(i) The brief electronic signal will be passed through a NOT gate to provide a high to low signal to trigger the 555 monostable circuit.
Draw the symbol for a NOT gate.

[1]

(ii) The electronic signal to be tested is shown in Fig. 12.4a.

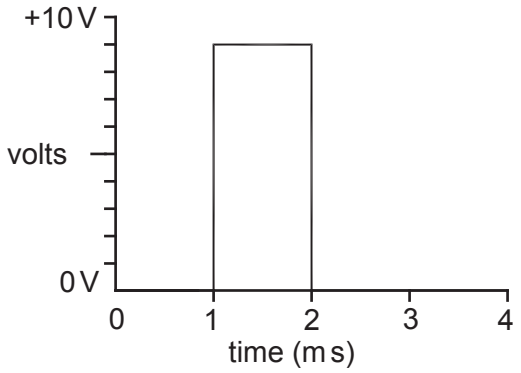

Fig. 12.4a

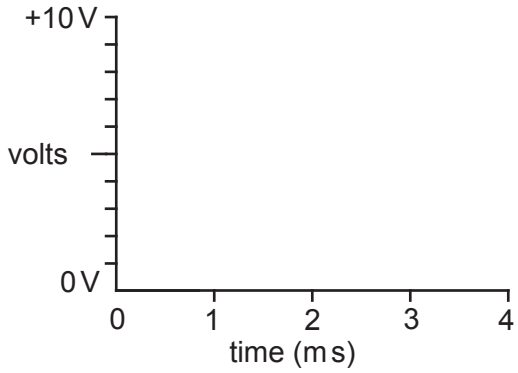

Fig. 12.4b

Complete Fig. 12.4b to show the result of passing the signal through a NOT gate. [1]

(iii) Fig. 12.5 shows the 555 Monostable circuit.

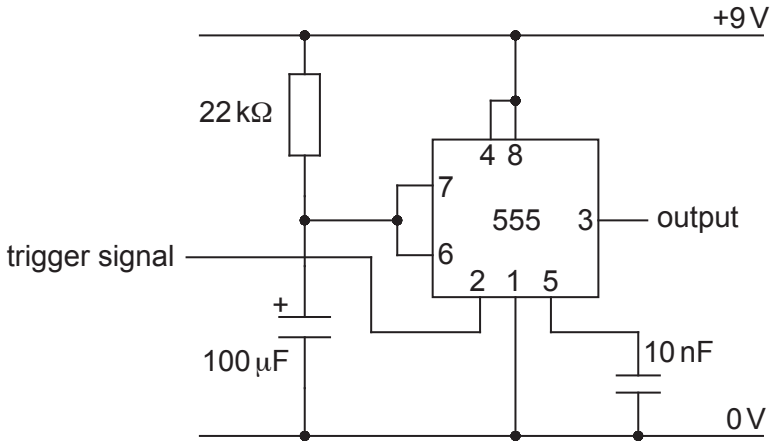

Fig. 12.5

Calculate the length of the output signal from the circuit.
Use the formula: t = 1.1 RC.

.....

.....

.....

..... [3]

(iv) A polarised capacitor and a non-polarised capacitor are used in the circuit.
Describe the difference between the two types of capacitor.

.....

.....

..... [2]

(d) Fig. 12.6 shows a 6 V relay and the circuit symbol for the relay.

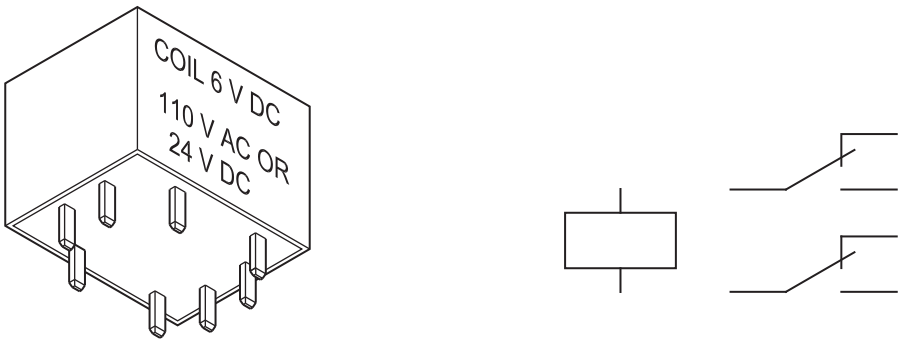

Fig. 12.6

(i) State **two** pieces of information that could appear in a catalogue to describe the 6 V relay.

1 .....

2 .....
[2]

(ii) State why a diode is used in any relay driver circuit that includes a transistor.

.....

..... [1]

(iii) Draw a diode in the correct position on the circuit in Fig. 12.7.

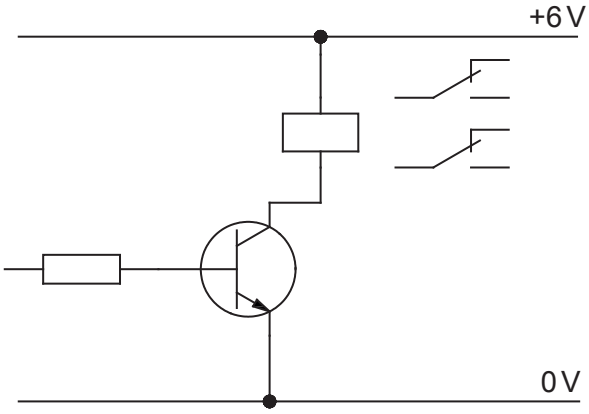

Fig. 12.7

[2]

BLANK PAGE

Permission to reproduce items where third-party owned material protected by copyright is included has been sought and cleared where possible. Every reasonable effort has been made by the publisher (UCLES) to trace copyright holders, but if any items requiring clearance have unwittingly been included, the publisher will be pleased to make amends at the earliest possible opportunity.

To avoid the issue of disclosure of answer-related information to candidates, all copyright acknowledgements are reproduced online in the Cambridge Assessment International Education Copyright Acknowledgements Booklet. This is produced for each series of examinations and is freely available to download at www.cambridgeinternational.org after the live examination series.

Cambridge Assessment International Education is part of the Cambridge Assessment Group. Cambridge Assessment is the brand name of the University of Cambridge Local Examinations Syndicate (UCLES), which itself is a department of the University of Cambridge.

© UCLES 2021